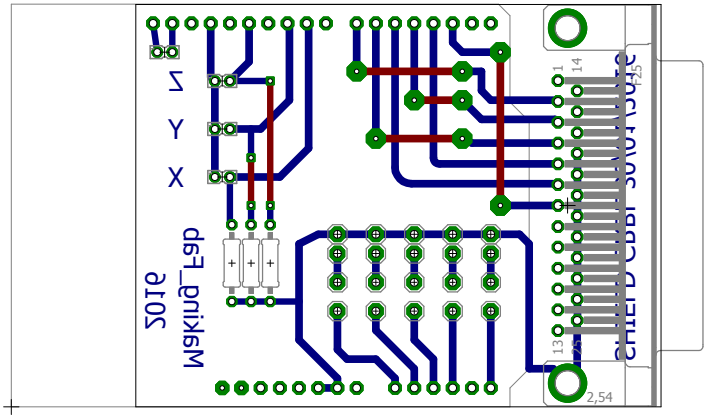


31/03/2016 23:27 F:\Documents\eagle\shield grbl\SHIELD1.brd